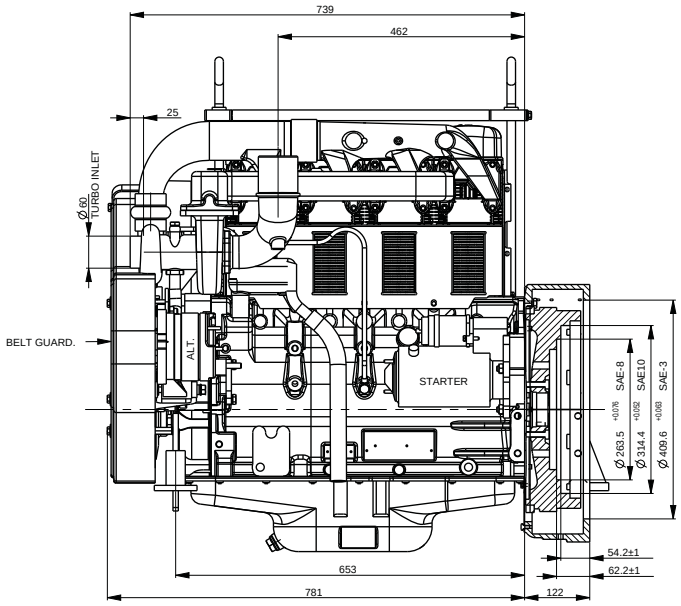

VIEW FROM STARTER END.

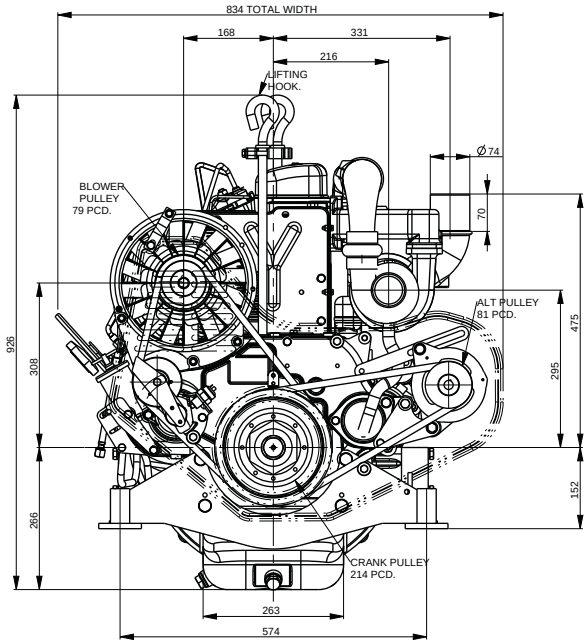

VIEW FROM GEAR END.

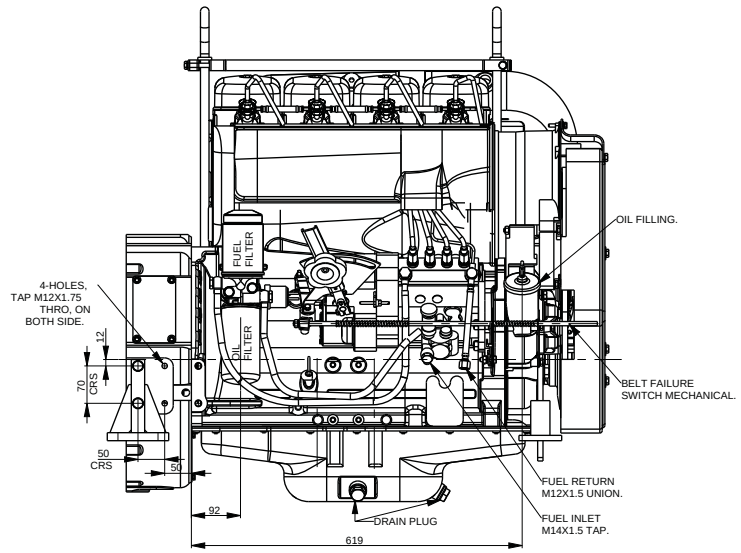

VIEW FROM FIP END.

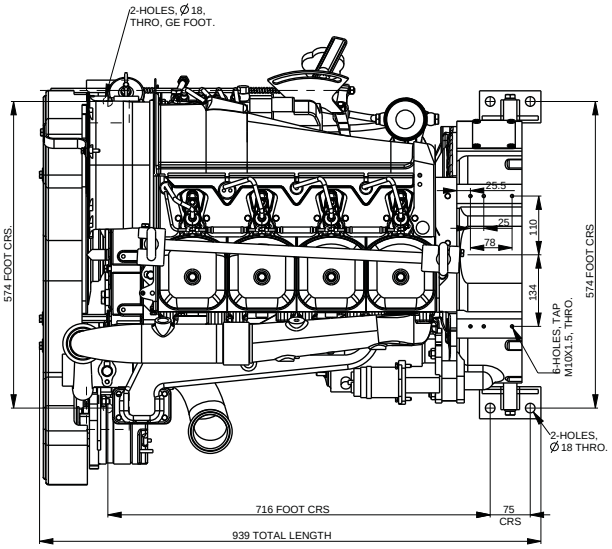

VIEW FROM TOP END.

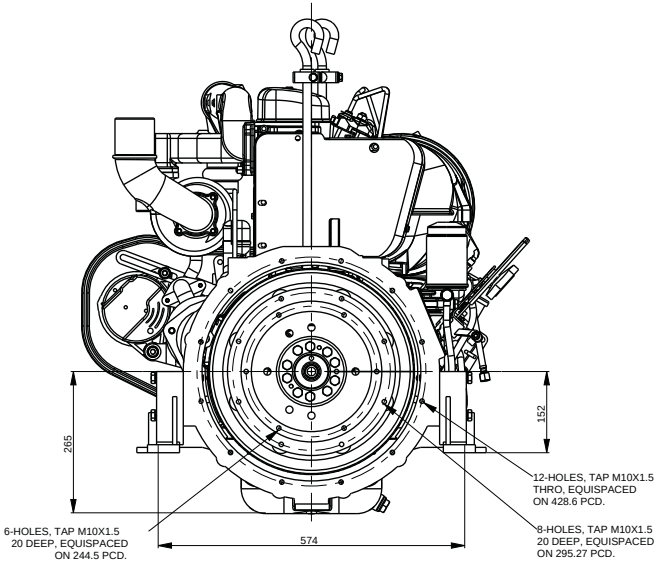

VIEW FROM FLYWHEEL END.

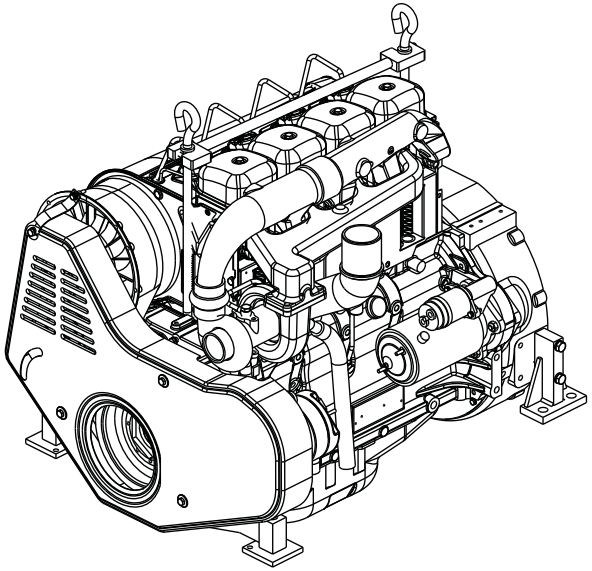

FOR REFERENCE.

No.	REVISION	ZONE	MODIFIED BY	REF. No.	DATE
00	NEW RELEASE				

IF IN DOUBT ASK

PRINTS OF PREVIOUS REVISION NO. SHOULD BE SCRAPPED

THIS DRAWING IS PROPERTY OF KIRLOSKAR OIL ENGINES LTD. AND MUST BE RETURNED ON REQUEST.IT IS SUBMITTED AS CONFIDENTIAL INFORMATION WITH OUR ENQUIRY, TENDER, ORDER OR CONTRACT NO. IT IS NOT TO BE ISSUED FOR ANY OTHER PURPOSE OR ORDER NOR MAY BE COPIED OR LENT WITHOUT OUR AUTHORITY IN WRITING.

FORMAT No.R&E/FORM/056/01 (REFER DOP No. R&E 4.4/03)

UNLESS OTHERWISE SPECIFIED
- ALL DIMENSIONS ARE IN mm.
- SURFACE ROUGHNESS AS PER CO. STD.NO.10501.
- UNMENTIONED TOLERANCES AS PER CO.STD.NO.11001.
- REMOVE ALL SHARP BURRS AND SHARP EDGES.
- DRAWING NOT TO BE SCALED.

UNMENTIONED

RADII	--
CHAMFER	--
UNDERCUT	--

LIFECYCLE STATE:- Concept

CAD DRG. FILE:-	PLM		CASTING/FORGING DRG. NO. --
MATERIAL :- --	HEAT TREATMENT :- --	WEIGHT (Kg) :- --	
DRN CHETAN	TITLE ENGINE INSTALLATION		TYPE HA494TC
CHD.			SCALE 1:5
APPD.			SHT. NO 1 OF 1
DATE 07/10/2014			

KIRLOSKAR OIL ENGINES LTD., PUNE 411 003 (INDIA)

DRAWING NO. PROPOSAL

REV. NO. PR

SIZE A1